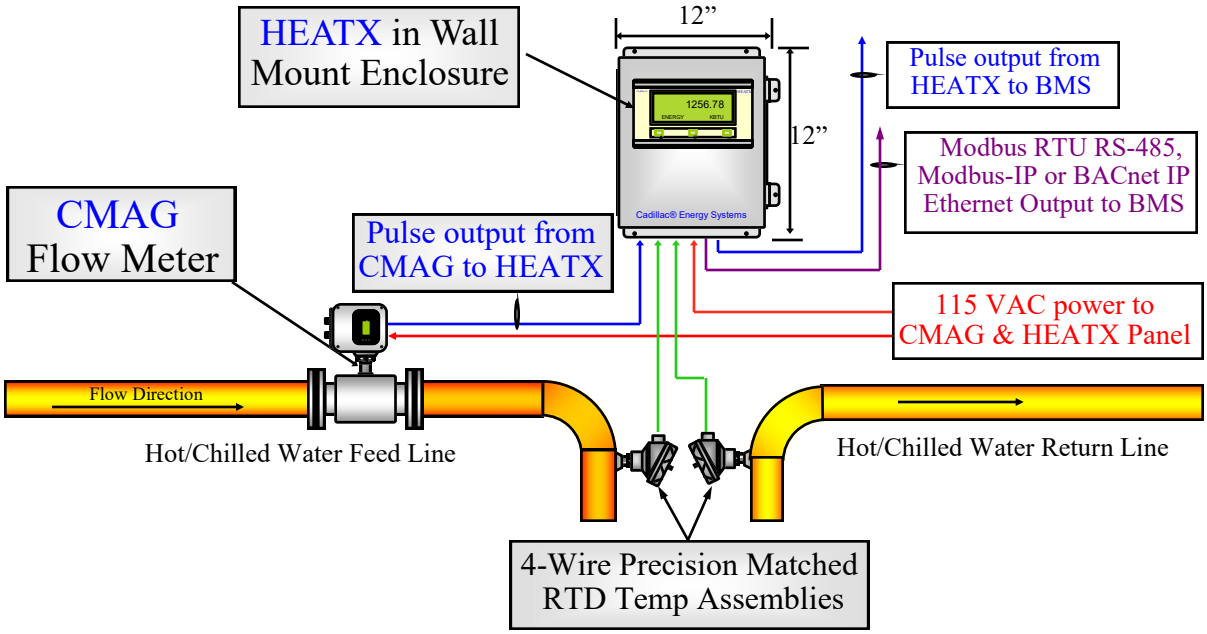CMAG HEATX HOT/CHILLED WATER ENERGY SYSTEM