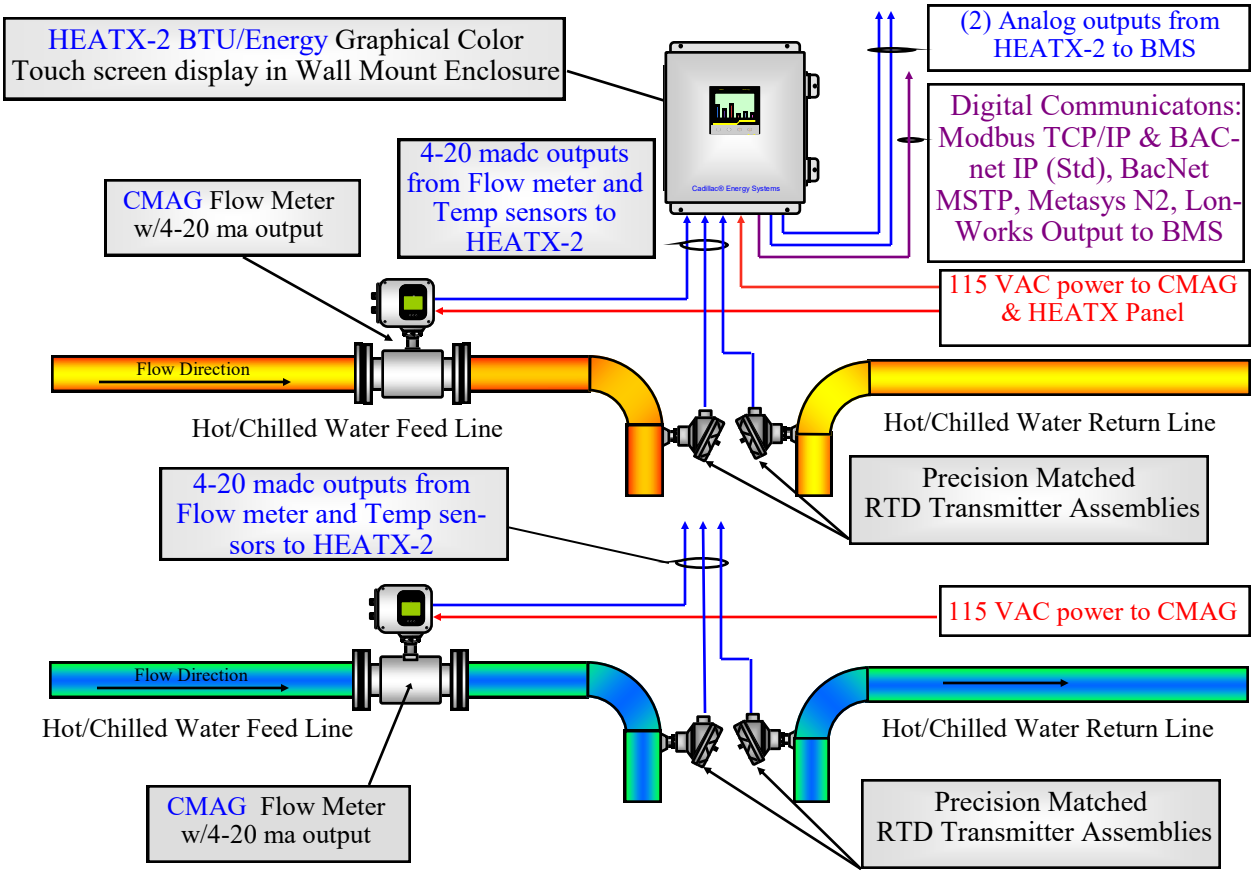CMAG/HEATX-2 DUAL HOT/CHILLED WATER ENERGY SYSTEM